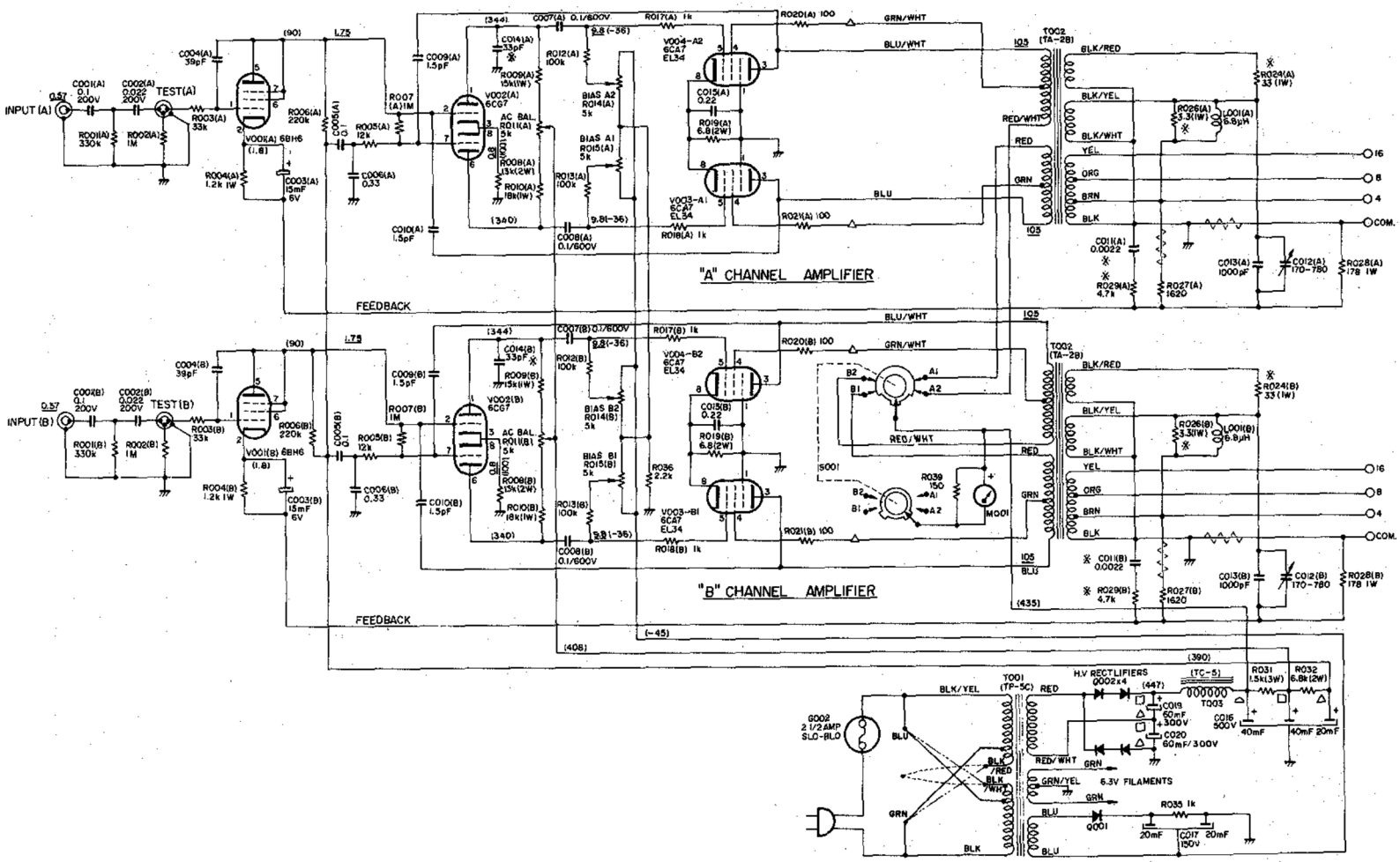

"A" CHANNEL AMPLIFIER
"B" CHANNEL AMPLIFIER
INPUT (A)
INPUT (B)
TEST(A)
TEST(B)
FEEDBACK
V001(A) 6BH6
V001(B) 6BH6
V002(A) 6CG7
V002(B) 6CG7
V004-A2 6CA7 EL34
V003-A1 6CA7 EL34
V004-B2 6CA7 EL34
V003-B1 6CA7 EL34
T002 (TA-2B)
T001 (TP-5C)
H.V RECTLIFIERS Q002x4
G002 2 1/2 AMP SLO-BLO
6.3V FILAMENTS